Compact Rugged Rod Style Bolt-In

The rugged and tough stainless steel “K” housing, with its bolt-in mounting design feature, actually becomes an extension of the cylinder. Its compact size is ideal for space-restricted applications.

Applications:

- Hydraulic cylinder
- Primary wood (lumber)
- Valve control
- Food processing
- Waste water plants
- Pulp and paper
- Gate position
- Hydro/Civil engineering

Features:

- Bolt-in design
- Rugged all stainless steel housing
- Designed for demanding applications
- Eliminates need for protective covers
- Pressure rated 8700 psi
- Outputs
  - Analog (voltage or current)
  - Digital start/stop
  - Pulse with modulates (PWM)
  - PWM with recirculations
  - SSI
- Stroke length – 1" to 200"
- Quick disconnect and integral cable

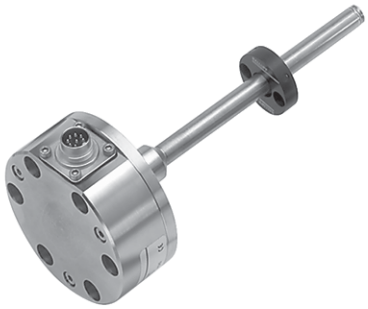

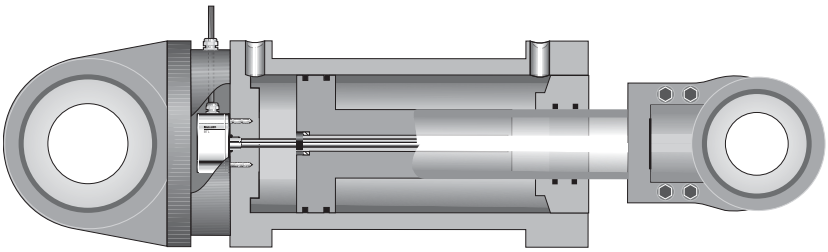

General Specifications .... pg 40
Electrical Options ..... pgs 41-42
Accessories ..... pgs 43-44
Installation Guidelines .... pg 44
Wiring Diagrams ..... pg 45
How to Order ..... pg 46

K Compact, Bolt-in Rod Style

Series	**K Style**
Available Lengths	25 mm (1 in) to 3962 mm (156 in)
Output Signals	Analog, Digital Pulse, SSI

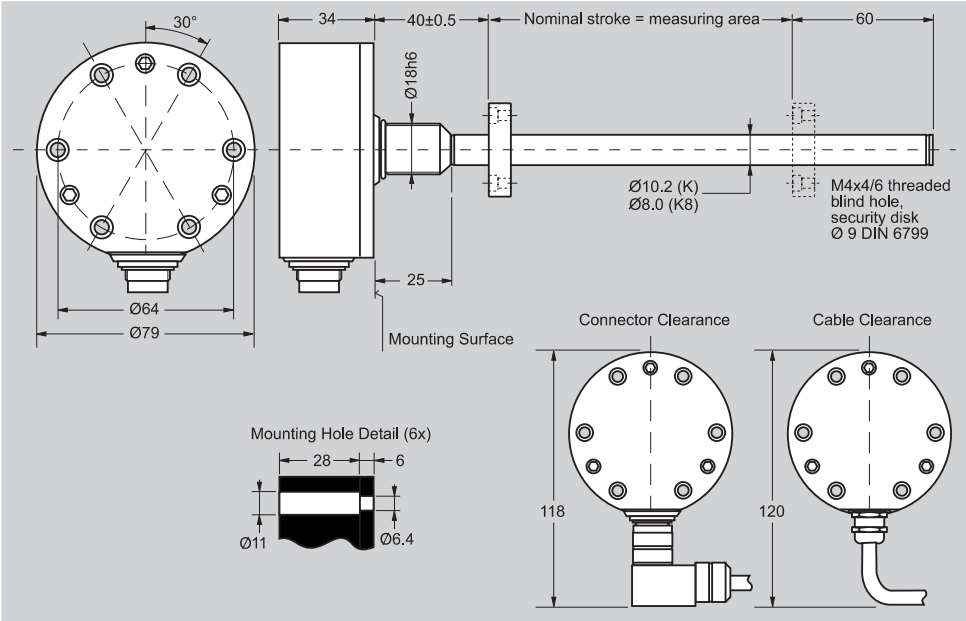

Ordering Code	**BTL-5-_ _-M_ _ _-K-_ _ _ _** (See ordering code on page 46)
Measurement Type	Linear displacement
Measurement Range	25 mm (1 in) to 3962 mm (156 in)
Shock Rating	100 g/6 ms (100 g/2 ms continuous) per IEC 68 2-27
Vibration Rating	12g, 10 to 2000 Hz per IEC 68-2-6
Environmental Protection	Connector versions: IP 67 Integral cable versions: IP 68
Housing Material	316 stainless steel
Rod & Flange Material	Tube: 316T stainless, flange: 316L
Pressure Rating (rod)	600 bar (8700 PSI) max (10.2 mm Ø Pressure Tube 250 (3600 PSI) max (8 mm Ø Pressure Tube)
Operating Temperature	-40 to + 185° F
Storage Temperature	-40 to + 212° F
Humidity	< 90% non-condensing
Connection Type	connector or integral cable
Noise Immunity	ESD, RFI and BURST per IEC 1000-4-2/3/4/6, severity level 3
Approvals	CE

Warning:
These products are not rated for personnel safety applications.

Accessories:
Magnets and Floats ..... pg 43
Connectors ..... pg 44

For additional connectors, see pages 107-114

Autotuning Circuitry

Patented Autotuning circuitry in Balluff Micropulse® transducers automatically compensates for changes in the strength of the magnetostrictive return signal.

- Allows Micropulse rod-style transducers to be used in hydraulic cylinders that have both new and legacy Balluff magnets. Autotuning allows use of many legacy competitor's magnets as well.
- Automatically compensates for changes in temperature, providing a more stable signal over a wide temperature range.

Electrical Interface	Analog	Analog	Digital
Electrical Type	Voltage	Current	Start/Stop, PWM
Part No. Code (See pg. 46)	**A, B, G**	**E, C**	**P, M, N, I, L, R, K**
Output	0...+10 V, -5...+5 V, -10...+10 V	4...20 mA, 0...20 mA	Start/Stop or Pulse-width-modulated (RS422/RS485)
Output Load	> 2 KΩ (5 mA max)	≤ 500 Ω	per spec
Resolution	≤ 0.1 mV	≤ 0.2 µA	Controller dependent
Non-linearity	±100 µm to 500 mm stroke, ±0.02 % over 500 mm stroke	±100 µm to 500 mm stroke, ±0.02 % over 50 mm stroke	±100 µm to 500 mm stroke, ±0.02 % over 500 mm stroke
Repeatability	Resolution/ min 2 µm	Resolution/ min 2 µm	Resolution/ min 2 µm
Hysteresis	4 µm	4 µm	4 µm
Sampling Rate	500 Hz stroke > 2000 mm 1 kHz stroke < 2000 mm	500 Hz stroke > 2000 mm 1 kHz stroke < 2000 mm	500 Hz stroke > 2000 mm 1 kHz stroke < 2000 mm
Temperature Coefficient*	[150µ V/° C + (5 ppm/°C*P*V/NL)] * ΔT	[0.6µA/°C + (10 ppm/°C*P*V/NL)] * ΔT	(6 µm + 5 ppm*NL) / °C
Operating Voltage	24 Vdc ±20% or 10...30 Vdc	24 Vdc ±20% or 10...30 Vdc	24 Vdc ±20% or 10...30 Vdc
Operating Current	< 150 mA Nominal, @ 24 Vdc	< 150 mA Nominal, @ 24 Vdc	<150 mA Nominal, @ 24 Vdc

Notes:
Analog voltage output versions incorporate both rising and falling outputs. Analog current version must be ordered as rising or falling ouputs.

***Temperature coefficient variables:**

V = output range in V
I = output range in [mA]
ΔT = temperature change
P = magnet position
NL = stroke length

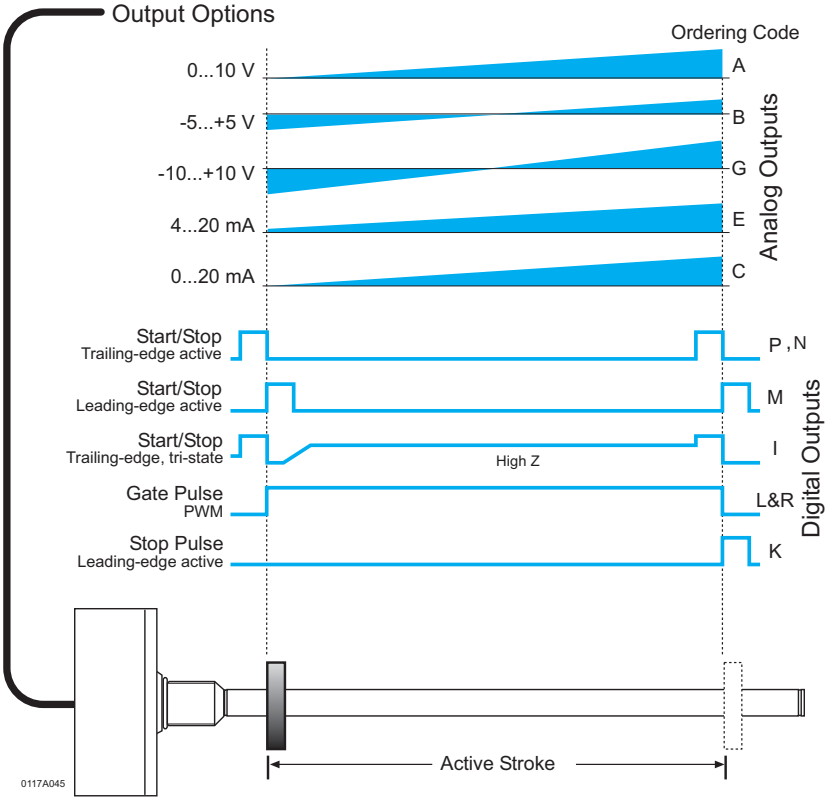

Analog and Digital Output Options for the Micropulse K Style

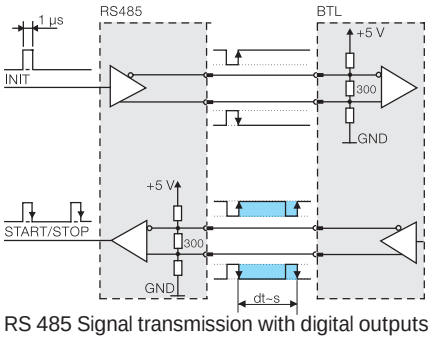

RS 485 Signal transmission with digital outputs

SSI

The SSI (synchronous serial interface) output interfaces with popular control systems from manufacturers such as Allen-Bradley, Delta Computer, Siemens, Parker and many others. Cable spans can be up to 400 m with noise free operation. Individual, EEPROM linearization of this interface makes it ideal for applications requiring the best accuracy available.

Ordering Code	**S**
Resolution	5, 10, 20 or 40 µm
Non-linearity	±30 µm or ±2LSBs, whichever is greater
Repeatablity (resolution + hysteresis)	±1 digit
Hysteresis	≤ 1 digit
Sampling Rate	500 µs
Temperature Coefficient	(6 µm + 5ppm x L)/°C
Communication Speeds	100, 200, 400, 500, 1000 kHz
Output Modes	24 or 25 bits
Operating Voltage	24 Vdc ±20%
Operating Current	≤ 80 mA
Output	Standard RS-485/422 levels

Notes:

SSI Maximum cable lengths

Cable length	Clock Freq.
< 25 m	< 1000 kHz
< 50 m	< 500 kHz
< 100 m	< 400 kHz
< 200 m	< 200 kHz
< 400 m	< 100 kHz

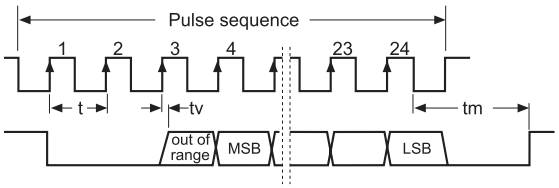

BTL5-S1_ _-Mxxxx-K-_ _ _ _

Data Format
0 = Binary, increasing, 24 bit
1 = Gray code, increasing, 24 bit
2 = Binary, falling, 24 bit
3 = Gray code, falling, 24 bit
6 = Binary, increasing, 25 bit
7 = Gray code, increasing, 25 bit
8 = Binary, falling, 25 bit
9 = Gray code, falling, 25 bit

System Resolution
2 = 5 µm
3 = 10 µm
4 = 20 µm
5 = 40 µm
6 = 100 µm
8 = 50 µm

Stroke Length
xxxx = length in mm
(see chart on page 46)
Max = 156" (3962 mm)

Connection Type
S 32 = 8-pin connector (standard)[1]
KA02 = 2 m PUR cable
KA05 = 5 m PUR cable
KA10 = 10 m PUR cable
KA15 = 15 m PUR cable

[1]See page 44 for mating cables/connectors.

Product	Magnet, Spacer	Magnet, Spacer	Magnet, Spacer	Magnet, Spacer
Type	Ø32 ring	Ø32 open ring	Ø25 ring	Ø22 ring

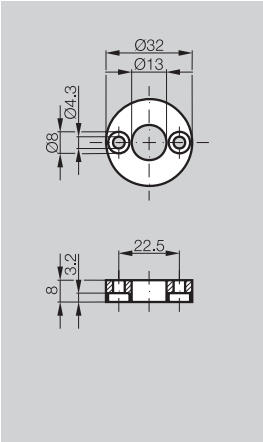

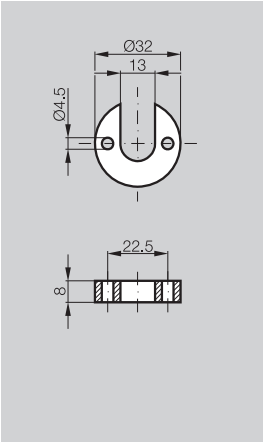

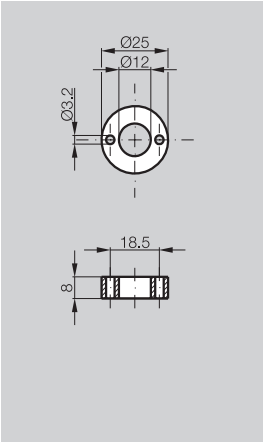

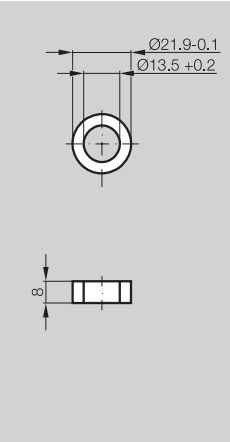

Ordering Code - Magnet	**BTL-P-1013-4R***	**BTL-P-1013-4S***	**BTL-P-1012-4R***	**BTL-P-1014-2R**
Ordering Code - Spacer	**BTL Z-P-1013-4R-SPACER**	**SPACER BTL -P-1013-0S**	**BTL Z-2-1012-4R-SPACER**	**N/A**
Material	AL	AL	AL	AL
Weight	12 g	12 g	12 g	10 g
Magnet Speed	any	any	any	any
Operating/Storage Temperature	-40…+100°C	-40…+100°C	-40…+100°C	-40…+100°C

*Spacer is included with these magnets

Product	Magnet	Magnet	Magnet	Magnet
Type	Barrel float	Barrel float	Bullet float	Sphere float

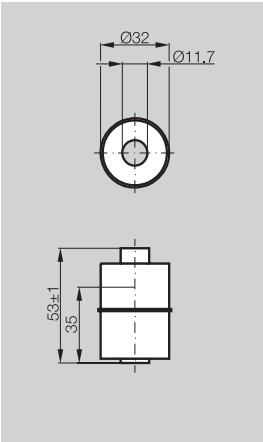

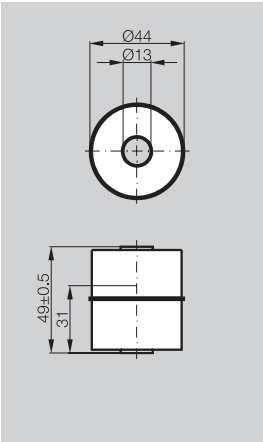

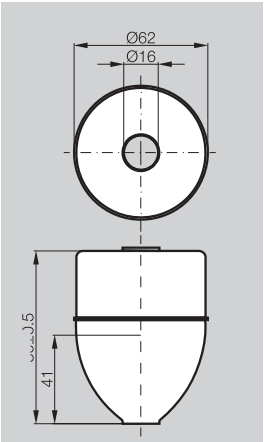

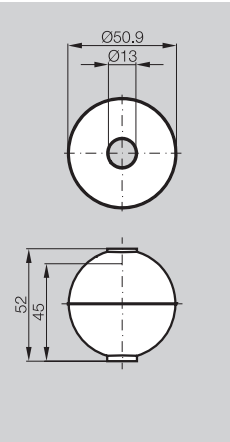

Ordering Code	**BTL2-S-3212-4Z**	**BTL2-S-4414-4Z**	**BTL2-S-6216-8P**	**BTL2-S-5113-4K**
Material	Stainless 316	Stainless 316	Stainless 316	Stainless 316
Weight	20 g	35 g	66 g	34 g
Operating/Storage Temperature	-40…+120°C	-40…+120°C	-40…+120°C	-40…+120°C
Water Displacement	35 mm	30 mm	41 mm	26 mm
Pressure (static)	24 bar (348 psi)	20 bar (290 psi)	15 bar (217 psi)	40 bar (580 psi)

Product	Straight Connector	Right-angle Connector	Molded Straight Connector	Molded Right-angle Connector
Type	8-pin female	8-pin female	8-pin female	8-pin female

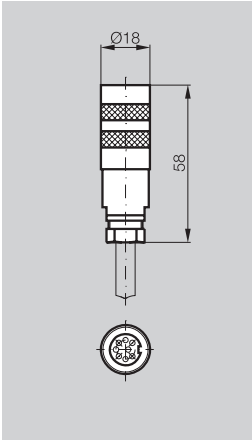

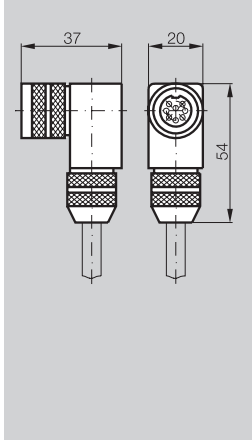

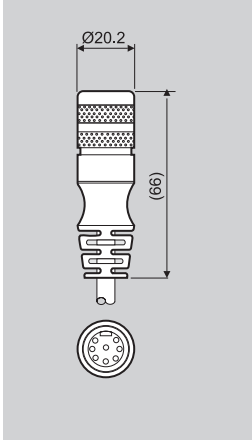

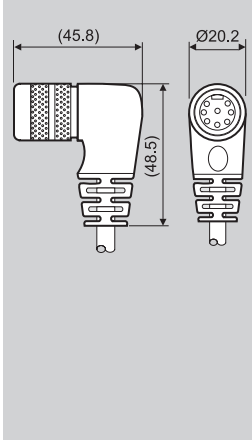

Ordering Code	**BKS-S 32M-_*_**	**BKS-S 33M-_*_**	**BKS-S 232-PU-_*_**	**BKS-S 233-PU-_*_**
Material	CuZn, nickel plated	CuZn, nickel plated	CuZn, nickel plated	CuZn, nickel plated
Contact Surface	0.8 µm Au	0.8 µm Au	0.8 µm Au	0.8 µm Au
Solder Connection	00 option only	00 option only	N/A	N/A
Cable	7 x 0.25 mm²/AWG 24	7 x 0.25 mm²/AWG 24	7 x 0.25 mm²/AWG 24	7 x 0.25 mm²/AWG 24
Cable Diameter	6.35 mm ± 0.35 mm	6.35 mm ± 0.35 mm	6.35 mm ± 0.35 mm	6.35 mm ± 0.35 mm
Allowable Cable Diameter	6…8 mm	6…8 mm	N/A	N/A
Cable Material	PUR	PUR	PUR	PUR
Environmental Rating	IP 67 (when installed)	IP 67 (when installed)	IP 67 (when installed)	IP 67 (when installed)

For additional connectors, see pages 107-114

* Indicate cable length in ordering code in meters
(consult factory for longer lengths)
00 = connector only (only available for BKS-S 32M and BKS-S 33M)
02 = 2 meter cable
05 = 5 meter cable

Installation

The Micropulse K transducer has 6 mounting holes for cylinder head screws (ISO 4762 M6×18 A2-70).
We recommend installing in non-magnetizable materials.
If using magnetizable material, installation must be done as shown below. Sealing is at the flange mounting surface using a supplied 15.4 × 2.1 O-ring.

Detail

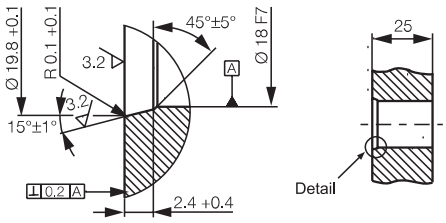

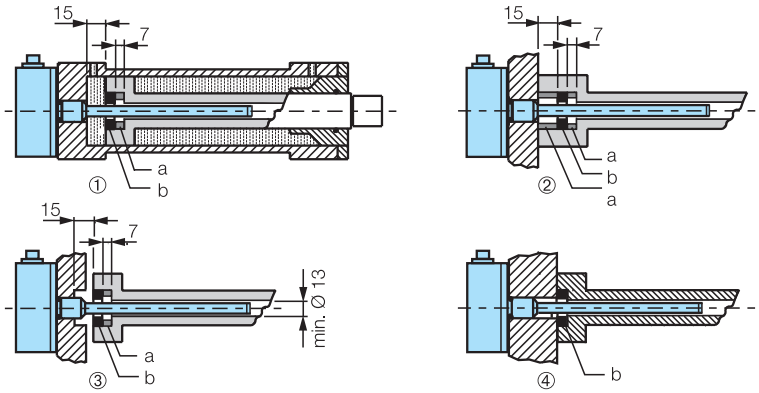

①②③ For magnetizable material
④ For non-magnetizable material
a Spacer made of non-magnetizable material
b Magnet

Analog Wiring Diagrams

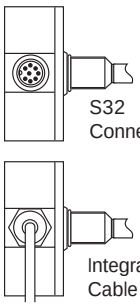

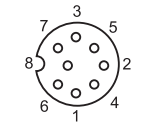

Analog Voltage 24 V (A, B, G)

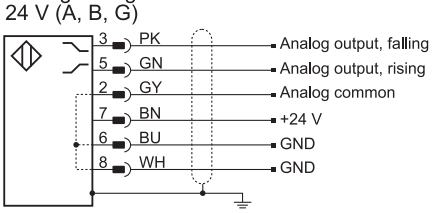

Analog Voltage 10...30V (A, B, G)

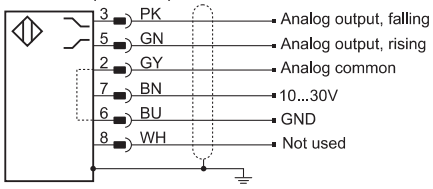

Analog Current 24 V (E, C)

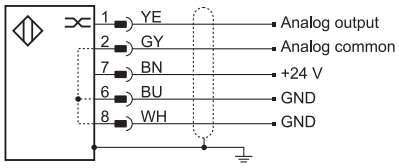

Analog Current 10...30V (E, C)

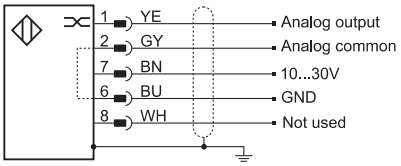

Digital Wiring Diagrams

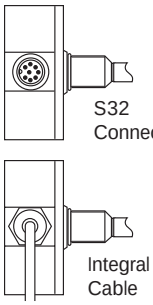

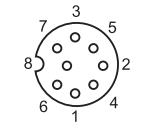

Digital, RS485 differential 24 V (P, M, I, K, L, R)

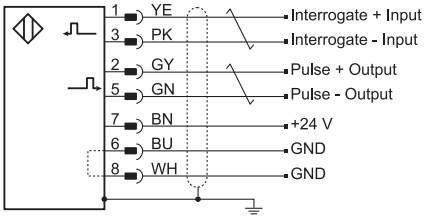

Digital, Single-ended 24 V (N)

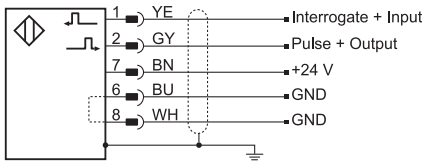

Digital, RS485 differential 10...30V (P, M, I, K, L, R)

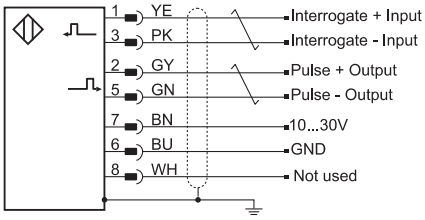

Digital, Single-ended 10...30V (N)

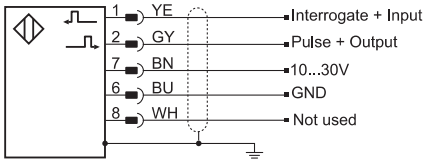

SSI Wiring Diagram

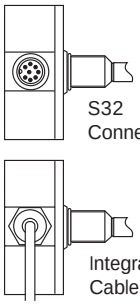

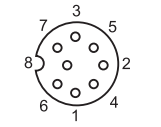

SSI (S)

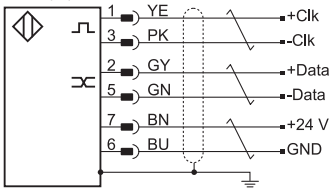

* Pin-8 (WH) must remain unconnected

Note: = twisted-pair

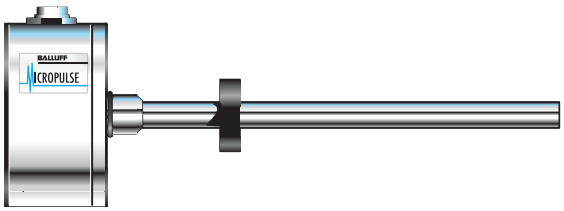

Ordering Code

B T L 5 - A 1 1 - M 0 3 0 5 - K - S R 3 2 - E 4 / U S
K 0 5

Balluff Linear Transducer

Generation 5

Output Type

A = 0 to 10 Vdc
B = -5 to +5 Vdc
C = 0 to 20 mA
E = 4 to 20 mA
G = -10 to +10 Vdc
S = SSI*

I = Differential start/stop with tri-state
K = Differential stop - leading edge active
L = Differential pulse - width modulated
M = Differential start/stop - leading edge active
N = Single ended start/stop - leading edge (add/US)
P = Differential start/stop - trailing edge active
R = Differential pulse-width - recirculated

Supply Voltage
1 = 24 Vdc ±20%
5 = 10...30 Vdc (Not available for S output)

Analog Output Operation
(Leave Blank for Digital Versions)
Voltage output (Output type A, B & G)
1 = User selectable rising or falling
Current output (Output type C & E)
0 = Minimum output at connector end (rising towards opposite end)
7 = Maximum output at connector end (falling towards opposite end)

Stroke Length
0 3 0 5 = 305 mm active stroke length (in mA)

Housing Type
K = Compact, bolt-in rod style, 10.2 mm Pressure Tube (standard)
K8 = Compact, bolt-in rod style, 8 mm Pressure Tube (1016 mm max length, 250 bar max pressure)

Connection Type
S R 3 2 = 8-pin quick disconnect metal connector (see page 44 for mating cable)
K 0 5 = Cable out (5 m standard; specify length in meters)

Interrogation (only valid if output type = R, otherwise leave blank)
I = Internal interrogation, E = External interrogation

Recirculation (only valid if output type = R, otherwise leave blank)
1=1 circulation, 2 = 2 circulations, 3 = 3 circulations, 4 = 4 circulations, 6 = 6 circulations, 8 = 8 circulations, 10 = 10 circulations,16 = 16 circulations

N output only

/US = TTL - single ended Start/Stop - leading edge (US Standard)

Blank = TTL - single ended Start only - leading edge (European Standard)

* See additional ordering information on page 42.

Standard Stroke Lengths, Inches (mm) (consult factory for additional lengths)

1	(0025)	9	(0230)	22	(0560)	48	(1220)	89	(2261)	156[A]	(3962)	192	(4877)
2	(0051)	10	(0254)	24	(0610)	50	(1270)	98	(2490)	160	(4064)	196	(4978)
3	(0076)	11	(0280)	26	(0661)	54	(1372)	108	(2743)	164	(4166)	200	(5080)
3.5	(0090)	12	(0305)	28	(0711)	60	(1524)	118	(2997)	168	(4267)		
4	(0102)	13	(0330)	30	(0762)	66	(1676)	126	(3200)	172	(4369)		
5	(0127)	15	(0381)	32	(0813)	69	(1753)	140	(3556)	176	(4470)		
6	(0152)	16	(0407)	36	(0914)	72	(1829)	144	(3658)	180[B]	(4572)		
7	(0178)	18	(0457)	40	(1016)	78	(1981)	148	(3759)	184	(4674)		
8	(0203)	20	(0508)	42	(1067)	84	(2134)	152	(3861)	188	(4775)		

[A] Maximum length for SSI = 156 inches.

[B] Maximum length for analog outputs = 180 inches.

Compact Rugged Rod Style Thread-In

Compact, rugged and built to last, the all stainless steel “W” housing can withstand the rigors of harsh, real-world applications. With its compact size and “built like a tank” ruggedness, the “W” housing is the logical choice for demanding applications.

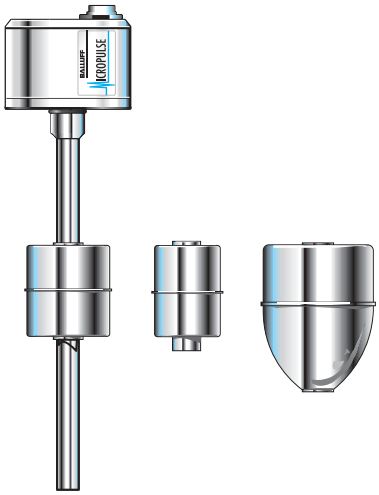

Applications:

- Hydraulic cylinder
- Primary wood (lumber)
- Valve control
- Food processing
- Waste water plants
- Pulp and paper
- Gate position
- Hydro/Civil engineering

Features:

- Rugged all stainless steel housing
- Designed for demanding applications
- Eliminates need for protective covers
- Pressure rated 8700 psi
- ¾”x16- UNF threads (W housing)
- Metric M18 thread version available (H housing)
- Outputs
  - Analog (voltage or current)
  - Digital start/stop
  - Pulse width Modulation (PWM)
  - PWM with recirculations
  - SSI
- Length – 2” to 200”
- Quick disconnect and cable out

General Specifications...pg. 32
Electrical Options...pgs. 33-34
Accessories...pgs. 35-36
Installation Guidelines...pg. 36
Wiring Diagrams...pg. 37
How to order...pg. 38

W Compact, Threaded Rod Style

Series	**W Style**
Available lengths	51mm (2 in) to 5080mm (200 in)
Output signals	Analog, Digital Pulse, SSI

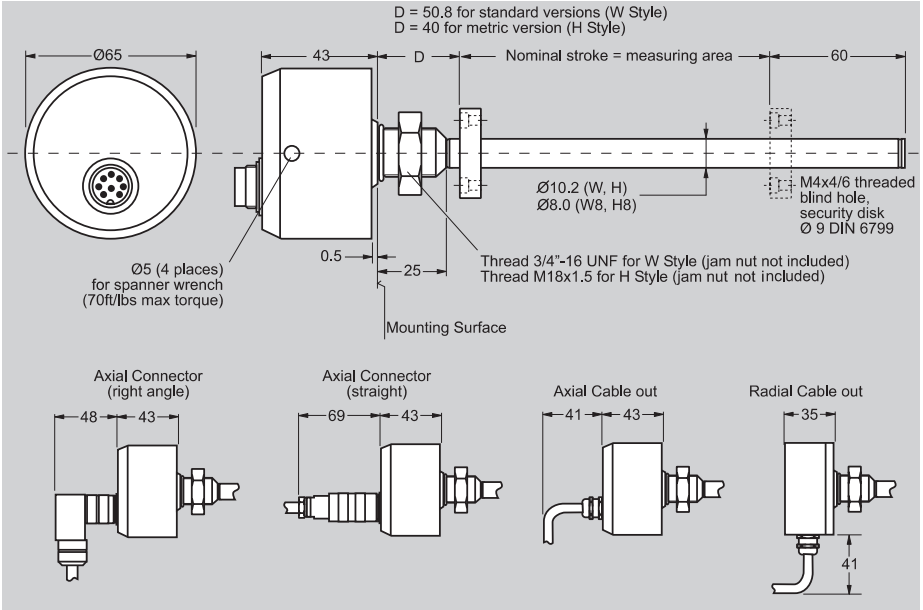

Ordering Code	**BTL 5-_ _ _-M_ _ _-W-_ _ _ _** (See ordering code on page 38)
Measurement type	Linear displacement
Measurement range	51mm (2 in) to 5080mm (200 in)
Shock rating	100 g for 6ms (100g for 2ms continuous) per IEC 68 2-27
Vibration rating	12g, 10 to 2000 Hz per IEC 68-2-6
Environmental protection	IP 67, IP 68 for cable out
Housing material	316 stainless steel
Rod & flange material	Tube: 316T stainless, flange: 316L
Pressure rating (rod)	600 bar (8700 PSI) max (10.2 mm Ø Pressure Tube 250 (3600 PSI) max (8 mm Ø Pressure Tube)
Operating temperature	-40 to + 185^{0}F
Storage temperature	-40 to + 212^{0}F
Humidity	<90% non-condensing
Connection type	connector or integral cable
Noise immunity	ESD, RFI and BURST per IEC 1000-4-2/3/4/6, severity level 3
Approvals	CE

Warning:
These products are not rated for personnel safety applications.

Accessories:
Magnets and Floats...pg 35
Connectors...pg 36
For additional connectors, see page 91

Autotuning Circuitry

Patented Autotuning circitry in Balluff Micropulse® transducers automatically compensates for changes in the strength of the magnetostrictive return signal.

- Allows Micropulse rod-style transducers to be used in hydraulic cylinders that have either a Balluff magnet ring **OR** a competitor's legacy* magnet ring. Autotuning makes **retrofitting** older hydraulic cylinders trouble-free, with no need to change out the competitor's magnets.
- Automatically compensates for changes in temperature, providing a more stable signal over a wide temperature range.

* For Balluff compatibility with newer competitive magnet types, please consult factory.

Electrical interface	Analog	Analog	Digital
Electrical type	Voltage	Current	Start/Stop, PWM
Part No. Code (See Pg. 38)	**A, B, G**	**E,C**	**P, M, N, I, L, R, K**
Output	0...+10V,-5...+5V,-10...+10V	4...20 mA, 0...20 mA	Start/Stop or Pulse-width-modulated (RS422/RS485)
Output load	>2KΩ (5 mA max)	≤500Ω	per spec
Resolution	≤0.1mV	≤0.2µA	Controller dependent
Non-linearity	±100µm to 500mm stroke, ±0.02 % over 500mm stroke	±100µm to 500mm stroke, ±0.02 % over 500mm stroke	±100µm to 500mm stroke, ±0.02 % over 500mm stroke
Repeatability	Resolution/ min 2µm	Resolution/ min 2µm	Resolution/ min 2µm
Hysteresis	4µm	4µm	4µm
Sampling rate	500 Hz stroke >2000mm 1KHz stroke <2000mm	500 Hz stroke >2000mm 1KHz stroke <2000mm	500 Hz stroke >2000mm 1KHz stroke <2000mm
Temperature coefficient*	[150 µV/° C + (5ppm/°C*P*V/NL)] * ΔT	[0.6µA/°C + (10 ppm/°C*P*V/NL)] * ΔT	(6 µm + 5 ppm*NL) / °C
Operating voltage	24 Vdc ±20% or 10...30 Vdc	24 Vdc ±20% or 10...30 Vdc	24 Vdc ±20% or 10...30 Vdc
Operating current	<150mA Nominal, @ 24 Vdc	<150mA Nominal, @ 24 Vdc	<150mA Nominal, @ 24 Vdc

Notes:
Analog voltage output versions incorporate both rising and falling outputs. Analog current version must be ordered as rising or falling ouputs.

***Temperature coefficient variables:**

V = output range in V
I = output range in [mA]
ΔT = temperature change
P = magnet position
NL = stroke length

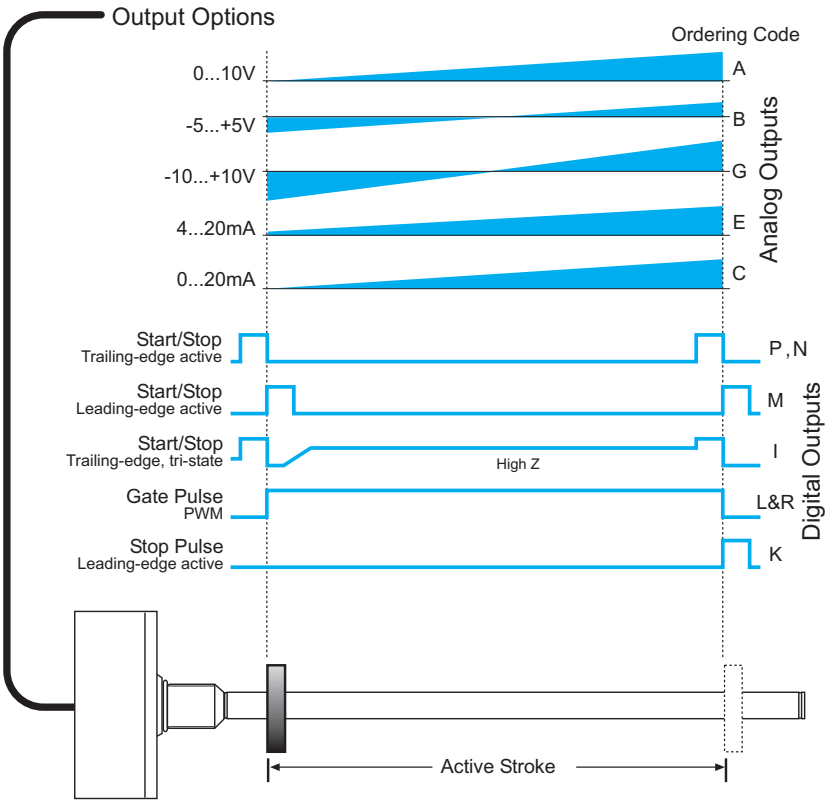

Analog and Digital Output Options for the Micropulse W Style

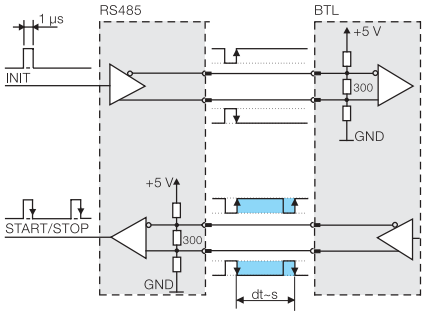

RS-485 signal transmission with digital outputs

SSI

The SSI (synchronous serial interface) output interfaces with popular control systems from manufacturers such as Allen-Bradley, Siemens, Parker and many others. Cable spans can be up to 400m with noise free operation. Individual EEPROM linearization of this interface makes it ideal for applications requiring the best accuracy available.

Ordering Code	S
Resolution	1, 5, 10, 20 or 40µm
Non-linearity	±30µm or ±2LSBs, whichever is greater
Repeatablity (resolution + hysteresis)	±1 digit
Hysteresis	≤ 1 digit
Sampling rate	500µS
Temperature coefficient	(6µm + 5ppm x L)/°C
Communication speeds	100, 200, 400, 500, 1000 kHz
Output modes	24 or 25 bits, binary or gray code
Operating voltage	24 Vdc ±20%
Operating current	≤ 80mA
Output	Standard RS-485/422 levels

Notes:

SSI Maximum cable lengths

Cable length	Clock Freq.
<25 m	<1000 kHz
<50 m	<500 kHz
<100 m	<400 kHz
<200 m	<200 kHz
<400 m	<100 kHz

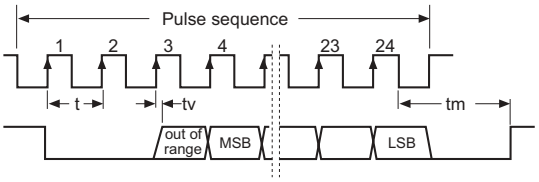

BTL5-S1_ _-Mxxxx-W-_ _ _ _

Data Format
0 = binary, increasing, 24-bit word length
1 = gray code, increasing, 24-bit word length
2 = binary, decreasing, 24-bit word length
3 = gray code, decreasing, 24-bit word length
6 = binary, increasing, 25-bit word length
7 = gray code, increasing, 25-bit word length
8 = binary, decreasing, 25-bit word length
9 = gray code, decreasing, 25-bit word length

System Resolution
1 = 1µm
2 = 5µm
3 = 10µm
4 = 20µm
5 = 40µm

Stroke Length
xxxx = length in mm
Max. stroke = 156" (3962mm)
(see chart on page 38)

Connection Type
S 32 = Connector
KA02 = 2m PUR cable
KA05 = 5m PUR cable
KA10 = 10m PUR cable
KA15 = 15m PUR cable

Product	Magnet, Spacer	Magnet, Spacer	Magnet, Spacer	Magnet, Spacer
Type	ø32 ring	ø32 open ring	ø25 ring	ø22 ring

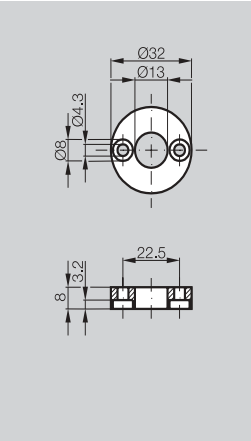

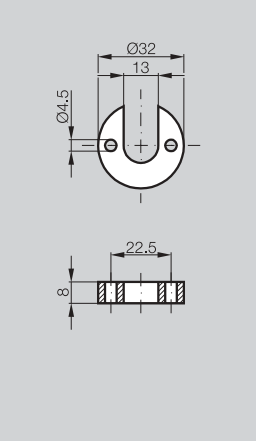

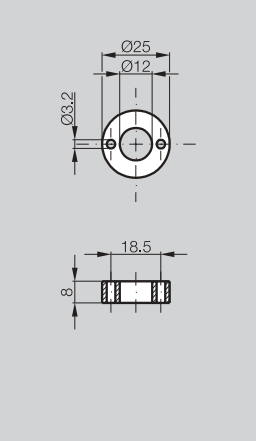

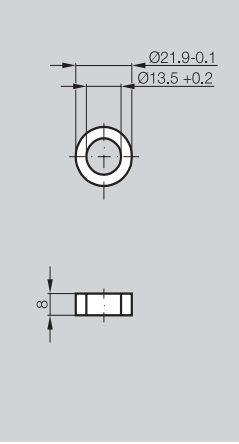

Ordering Code - Magnet	**BTL-P-1013-4R***	**BTL-P-1013-4S***	**BTL-P-1012-4R***	**BTL-P-1014-2R**
Ordering Code - Spacer	**BTL Z-P-1013-4R-SPACER**	**BTL Z-P-1013-4S-SPACER**	**BTL Z-2-1012-4R-SPACER**	**N/A**
Material	AL	AL	AL	AL
Weight	12g	12g	12g	10g
Magnet speed	any	any	any	any
Operating/storage temperature	-40…+100°C	-40…+100°C	-40…+100°C	-40…+100°C

*Spacer is included with these magnets

Product	Magnet	Magnet	Magnet	Magnet
Type	Barrel float	Barrel float	Bullet float	Sphere float

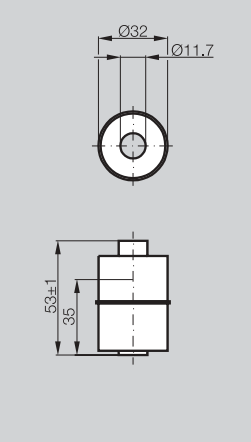

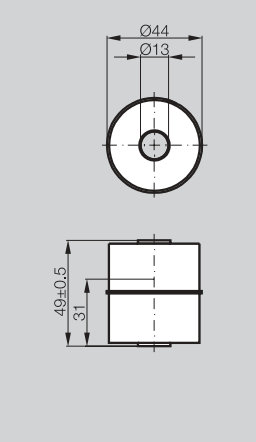

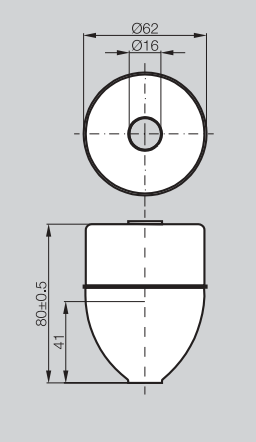

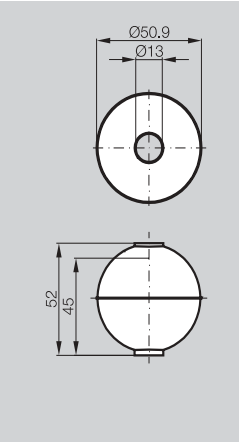

Ordering Code	**BTL2-S-3212-4Z**	**BTL2-S-4414-4Z**	**BTL2-S-6216-8P**	**BTL2-S-5113-4K**
Material	Stainless 316	Stainless 316	Stainless 316	Stainless 316
Weight	20g	35g	66g	34g
Operating/storage temperature	-40…+120°C	-40…+120°C	-40…+120°C	-40…+120°C
Water displacement	35mm	30mm	41mm	26mm
Pressure (static)	24 bar (348 psi)	20 bar (290 psi)	15 bar (217 psi)	40 bar (580 psi)

Product	Straight Connector	Right-angle Connector
Type	S32	S32

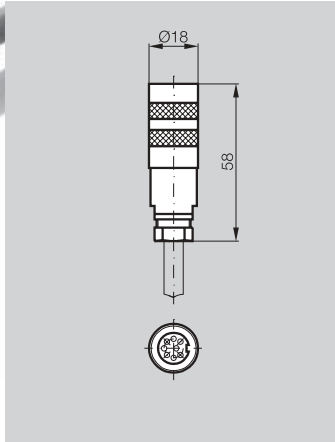

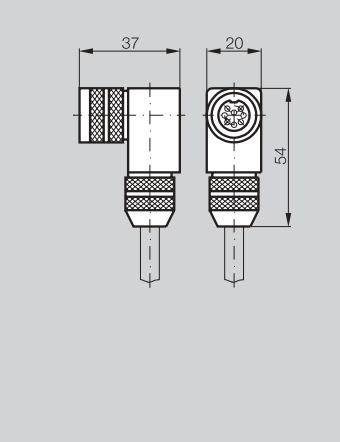

Ordering Code	**BKS-S 32M-_ _ _ _***	**BKS-S 33M-_ _ _ _***
Material	CuZn, nickel plated	CuZn, nickel plated
Contact surface	0.8µm Au	0.8µm Au
Solder connection	-	-
Cable	7 x 0.25mm²/AWG 24	7 x 0.25mm²/AWG 24
Cable diameter	6…8mm	6…8mm
Cable material	PVC (PUR optional)	PVC (PUR optional)
Environmental rating	IP67 (when installed)	IP67 (when installed)

For additional connectors, see page 91

*Indicate cable length in ordering code (consult factory for longer lengths)
00 = connector only
02 = 2 meter cable
05 = 5 meter cable

Installation

The BTL Micropulse transducer is provided with a ¾" x 16-UNF (optional M18 × 1.5) mounting thread. We recommend mounting into non-magnetizable materials. If magnetizable materials are used, the installation must be carried out as shown in the drawings at right. Sealing is at the flange mounting surface, using the supplied O-ring.

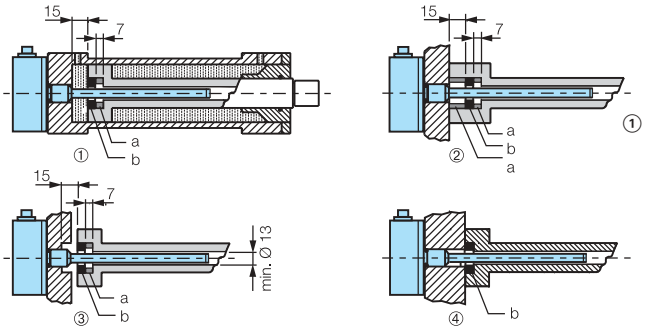

① ② ③ for magnetizable material
④ for non-magnetizable material
a Spacer made of non-magnetizable material
b Magnet

H Style Metric Thread Housing

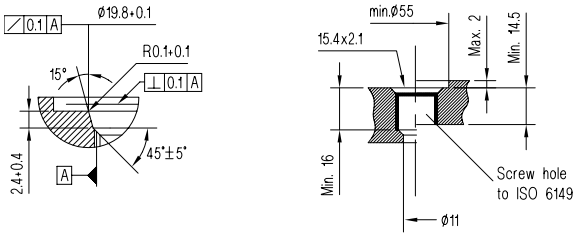

W Style Inch Thread Housing

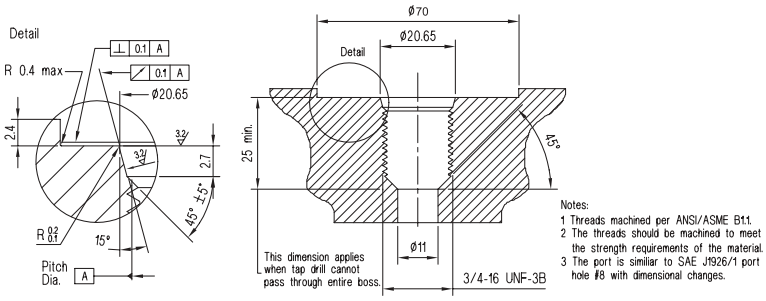

Analog Wiring Diagrams

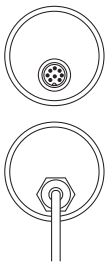

Analog Voltage ±15 V (A, B, G)

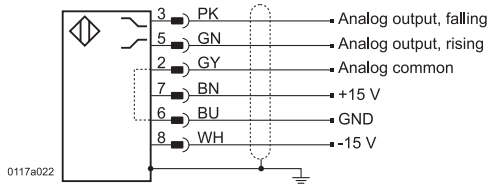

Analog Voltage 10...30V (A, B, G)

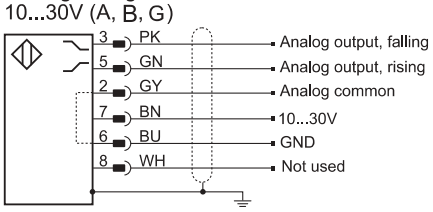

Analog Current 24 V (E, C)

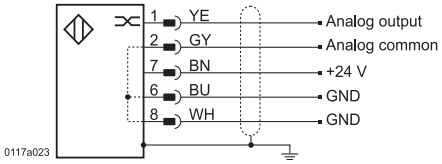

Analog Current 10...30V (E, C)

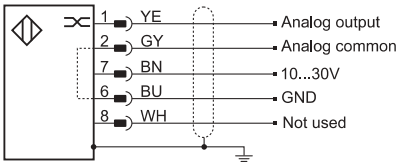

Digital Wiring Diagrams

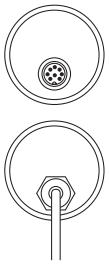

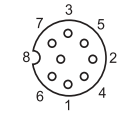

Digital, RS485 differential 24 V (P, M, I, K, L, R)

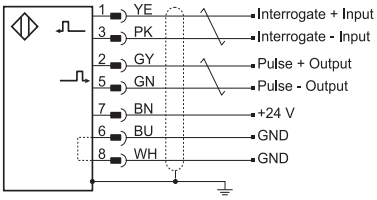

Digital, Single-ended 24 V (N)

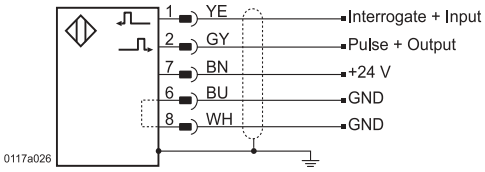

Digital, RS485 differential 10...30V (P, M, I, K, L, R)

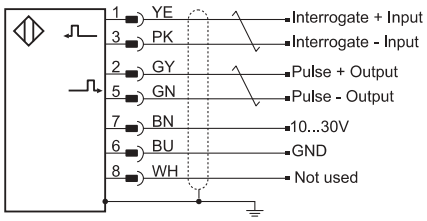

Digital, Single-ended 10...30V (N)

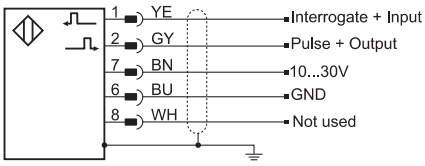

SSI Wiring Diagram

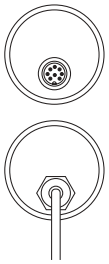

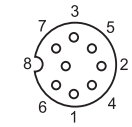

SSI (S)

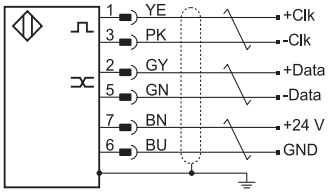

* Pin-8 (WH) must remain unconnected

Note:

= twisted-pair

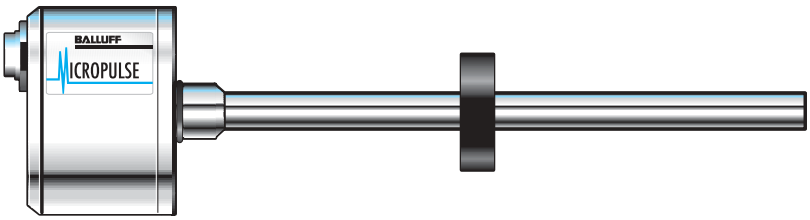

B T L 5 - A 1 1 - M 0 3 0 5 - W - S 3 2 - E 4 / U S
K A 0 5

Balluff - Linear Transducer

Generation 5

Output Type

A = 0 to 10Vdc
B = -5 to +5Vdc
C = 0 to 20 mA
E = 4 to 20 mA
G = -10 to +10 Vdc
S = SSI*

I = Differential start/stop with tri-state
K = Differential stop - leading edge active
L = Differential pulse-width modulated
M = Differential start/stop - leading edge active
N = Single ended start/stop - leading edge active
P = Differential start/stop - trailing edge active
R = Differential pulse-width - recirculated

Supply Voltage
1 = 24 Vdc ±20%
5 = 10...30 Vdc (Not available for S, T or H outputs)

Analog Output Operation
(Leave Blank for Digital Versions)
Voltage type (Output type A, B & G)
1 = User selectable rising or falling
Current type (Output type C & E)
0 = Minimum output at connector end (rising towards opposite end)
7 = Maximum output at connector end (falling towards opposite end)

Stroke Length
0 3 0 5 = 305mm active stroke

Housing Type
W...10.2 mm...
W8 = Compact, threaded rod style, 3/4"-16 UNF threads, 2 inch null point, 8.0mm dia. pressure tube (1016 mm max length, 250 bar max pressure)
H...10.2 mm...
H8 = Compact, threaded rod style, M18x1.5 threads, 40mm null point, 8.0mm dia. pressure tube (1016 mm max length, 250 bar max pressure)

Connection Type
S 3 2 = 8-pin quick disconnect metal connector
K A 0 5 = Axial cable out (5m standard; specify length in meters)
K 0 5 = Radial cable out (5m standard; specify length in meters)

Interrogation (only valid if output type= R, otherwise leave blank
I = Internal interrogation, E = External interrogation

Recirculation (only valid if output type= R, otherwise leave blank)
1=1 circulation, 2 = 2 circulations, 4 = 4 circulations, 8 = 8 circulations, 16 = 16 circulations

N output only

/US = TTL - single ended Start/Stop - leading edge (US Standard)

Blank = TTL - single ended Start only - leading edge (European Standard)

Standard Stroke Lengths (consult factory for additional lengths)

2 (0051)	11 (0280)	28 (0711)	66 (1676)	140 (3556)	180[B] (4572)
3 (0076)	12 (0305)	30 (0762)	69 (1753)	144 (3658)	184 (4674)
3.5 (0090)	13 (0330)	32 (0813)	72 (1829)	148 (3759)	188 (4674)
4 (0102)	15 (0381)	36 (0914)	78 (1981)	152 (3861)	192 (4877)
5 (0127)	16 (0407)	40 (1016)	84 (2134)	156[A] (3962)	196 (4978)
6 (0152)	18 (0457)	42 (1067)	89 (2261)	160 (4064)	200 (5080)
7 (0178)	20 (0508)	48 (1220)	98 (2490)	164 (4166)	
8 (0203)	22 (0560)	50 (1270)	108 (2743)	168 (4267)	
9 (0230)	24 (0610)	54 (1372)	118 (2997)	172 (4369)	
10 (0254)	26 (0661)	60 (1524)	126 (3200)	176 (4470)	

[A] Maximum length for SSI, Profibus, CANopen = 15.6 inches.

[B] Maximum stroke length for analog outputs = 180 inches.

*See additional ordering information on page 34

cowan dynamics

For sales and technical information, Contact us at:

Head Office/Factory:
6194 Notre Dame West
Montreal, Quebec H4C 1V4
TOLL-FREE: **855-341-3415**

Sales Office:
211 Watline Ave, Unit 205
Mississauga, Ontario L4Z 1P3
TEL: **905-829-2910**
TOLL-FREE: **855-341-3415**
E-MAIL: **info@cowandynamics.com**

www.cowandynamics.com